REVISIONS				
E.C.O.	REV.	DESCRIPTION	DATE	SIGNATURE
		SEE SHEET 1		

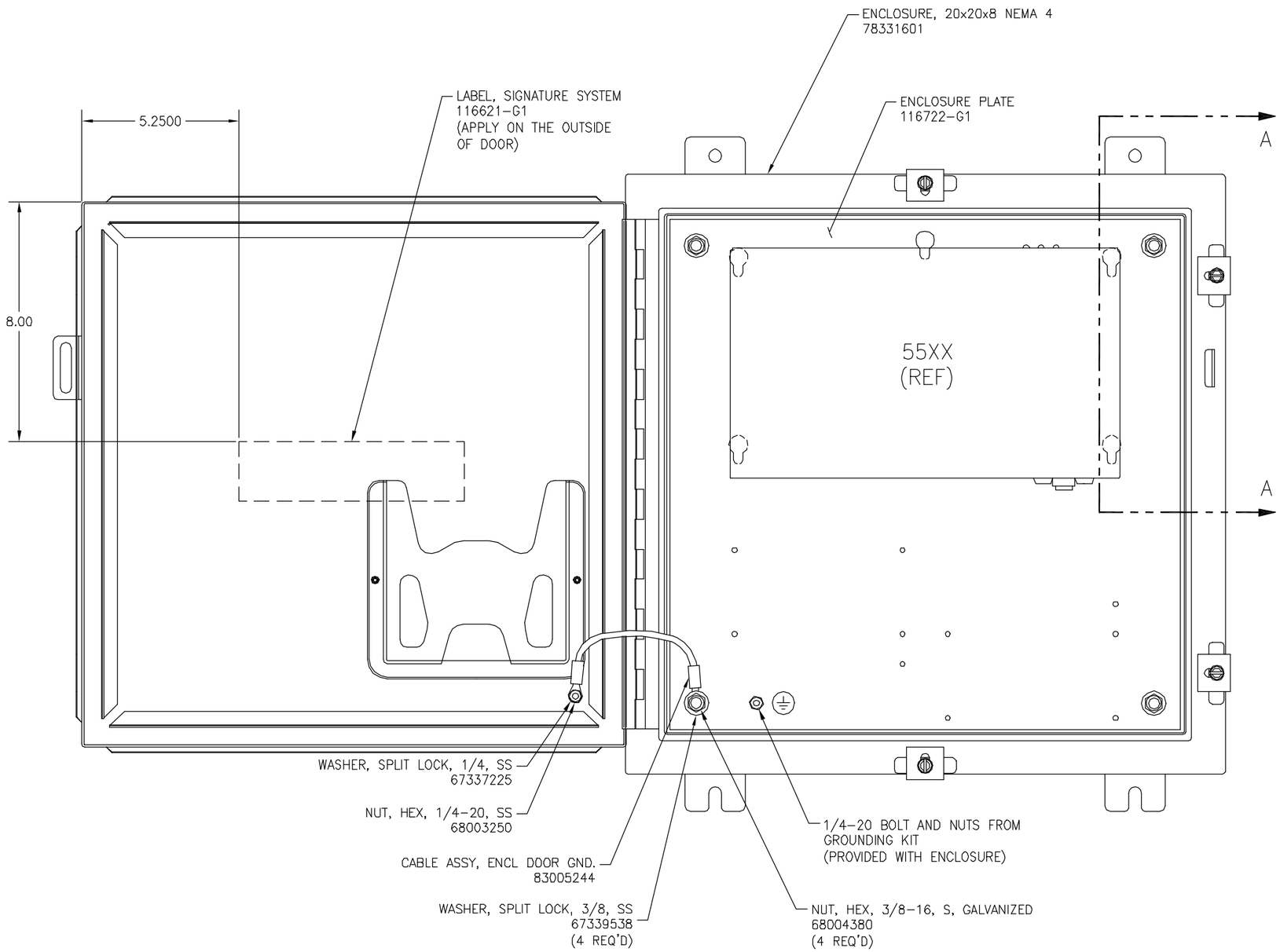

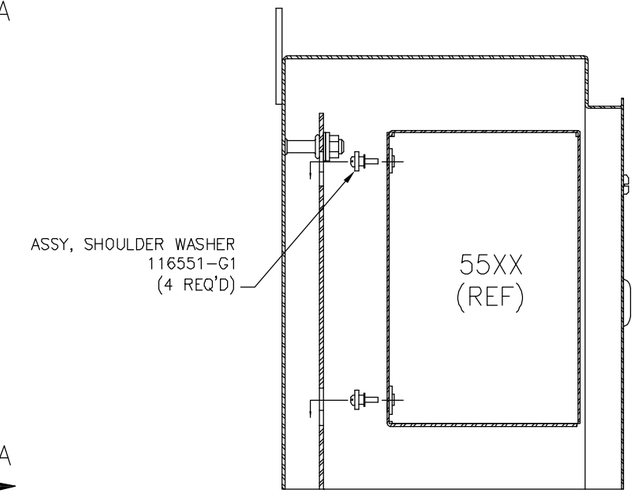

VIEW A-A

GROUP		
G		
G		
G		
G		
G		
G1	NEMA4INFO	5502/5504
	NEXT ASSEMBLY	UNIT USED ON
	APPLICATION	

MATERIAL:

FINISH:

COML TOL APPLY TO STK SIZES

UNLESS OTHERWISE SPECIFIED
DIMENSIONS ARE IN INCHES AND INCLUDE CHEMICALLY APPLIED OR PLATED FINISHES

TOLERANCES			
BASIC DIMENSION	DECIMALS 2 PLACE	DECIMALS 3 PLACE	FRACTIONS
UNDER 6	± .02	± .005	± 1/64
6-24 INCL	± .03	± .010	± 1/32
OVER 24	± .06	± .015	± 1/16
ANGLES ±1/2°	FILE NAME: 1167212A		

	SIGNATURE	DATE
DWN.	Ernesto Rodriguez	1/11/2001
CKD.		
APPR.		

EXCEPT AS MAY BE OTHERWISE PROVIDED BY CONTRACT, THESE DRAWINGS AND SPECIFICATIONS ARE THE PROPERTY OF DRANETZ-BMI, ARE ISSUED IN STRICT CONFIDENCE, AND SHALL NOT BE REPRODUCED, OR COPIED, OR USED AS THE BASIS FOR THE MANUFACTURE OR SALE OF APPARATUS WITHOUT PERMISSION.

DRANETZ-BMI
EDISON, NEW JERSEY U.S.A.

ENCLOSURE ASSEMBLY,
SMALL NEMA 4, INFONODE

SIZE	CODE IDENT. No.		REV.
D	23207	116721-G2	A

SCALE: 1/2 SHEET: 2 OF 2