REVISIONS				
E.C.O.	REV.	DESCRIPTION	DATE	SIGNATURE
---	1A	PROTOTYPE		
15665	A	RELEASED TO MANUFACTURING		

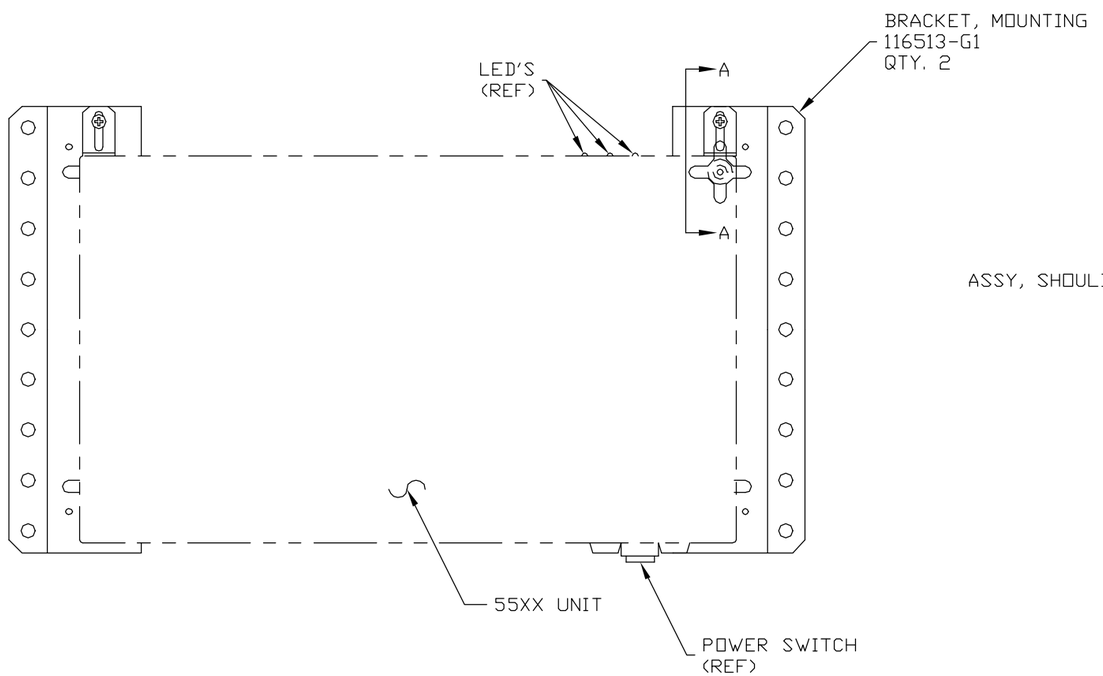

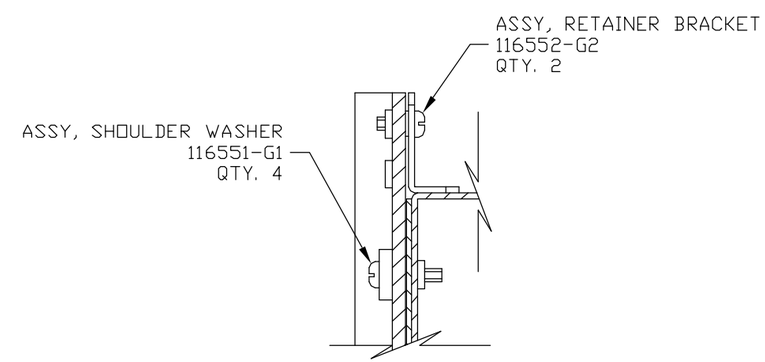

SECTION A-A

SCALE: 1 TO 1

GROUP		
G		
G		
G		
G		
G1	116614-G[]	DATANODE
G1	116469-G[]	INFONODE
	NEXT ASSEMBLY	UNIT USED ON
	APPLICATION	

MATERIAL:

FINISH:

COML TOL APPLY TO STK SIZES

UNLESS OTHERWISE SPECIFIED
DIMENSIONS ARE IN INCHES AND INCLUDE CHEMICALLY APPLIED OR PLATED FINISHES

TOLERANCES			
BASIC DIMENSION	DECIMALS 2 PLACE	DECIMALS 3 PLACE	FRACTIONS
UNDER 6	± .02	± .005	± 1/64
6-24 INCL	± .03	± .010	± 1/32
OVER 24	± .06	± .015	± 1/16
ANGLES ±1/2°	FILE NAME: _____		

	SIGNATURE	DATE
DWN.	S.KIEWIET	4-1-99
CKD.		
APPR.		

EXCEPT AS MAY BE OTHERWISE PROVIDED BY CONTRACT. THESE DRAWINGS AND SPECIFICATIONS ARE THE PROPERTY OF DRANETZ-BMI, ARE ISSUED IN STRICT CONFIDENCE, AND SHALL NOT BE REPRODUCED, OR COPIED, OR USED AS THE BASIS FOR THE MANUFACTURE OR SALE OF APPARATUS WITHOUT PERMISSION.

DRANETZ-BMI
EDISON, NEW JERSEY U.S.A.

ENCLOSURE BRACKET OPTION

SIZE	CODE IDENT. No.		REV.
C	23207	116533-G1	A
SCALE: 1:2		SHEET: 1 OF 2	